Technical data sheet

PYROPLUG® Peg plugs

Item number: 7202569



Plug for cable insulation.

Protect the FBA plugs against water in order to guarantee safe foaming in case of fire.

CE

Permanently elastic, closed-pore foam

Master data

Item number	7202569
Type	FBA-SN134
Description 1	Plug
Description 2	intumescent
Manufacturer	OBO
Dimension	Ø134x70mm
Colour	Brown
Material	Permanently elastic, closed-pore foam
Smallest sales unit	4
Unit of quantity	Piece
Weight	32.9 kg
Weight unit	kg/100 pc.

Technical data sheet

PYROPLUG® Peg plugs

Item number: 7202569

Dimensions

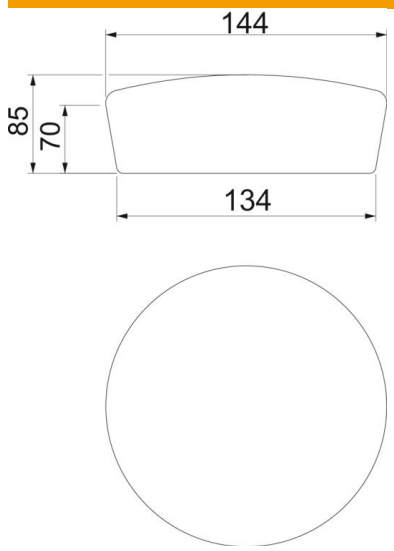

Height	70 mm
Dimension d	134 mm
Dimension d min.	144 mm

Technical data

Fire protection version	Foam plug
Shape	Round
For opening, max.	134 mm
For opening, min.	124 mm
ROHS-conformant	yes
Accessories required	yes